
MEGAMAN®
MEGAMAN®

Technology

MEGAMAN® Serviceable Modules

MEGAMAN®'s 'Building a Better Tomorrow' aims to make eco-friendly products which:

- Offer better energy efficiency
- Create the least environmental impact
- Avoid hazardous substances
- Increase product life expectancy
- Use recycled content and are recyclable

Throughout its product development, both in replacement lamps and modules, MEGAMAN® has chosen to design socketable LED solutions. This decision has multiple benefits. Not only can MEGAMAN® LED light sources be easily serviced and upgraded to the latest LED technology, but by using socketable solutions, existing luminaires can be retained, minimising the environmental impact of progress. This approach overcomes the inflexibility previously experienced by end users, of completely integrated LED light sources and fixtures.

The MEGAMAN® LED product range offers the highest degree of design freedom for lighting designers, both in terms of addressing future advances in LED technology, as well as offering a wide range of colour choices: 2400K, 2800K, 4000K and R9 options.


MEGAMAN®

Reflectors in a New Light

It is well established that energy efficient lighting needs to combine efficient light sources with efficient distribution of the light they produce. For that reason, MEGAMAN® spotlight LEDs use a parabolic reflector to control light distribution, rather than the lenses favoured by some manufacturers.

Superb light sources with precision control

Why reflectors?
There are many reasons for using reflectors in these applications, including:

Efficiency

- The parabolic reflector has been proven over many years to be the most efficient method for directing the light from a point source, so that maximum use is made of the lumen output (optical efficiency up to 98%).
- Lenses absorb light and have an efficiency <90%

Control of light

- With lenses the light is concentrated in the middle, creating high candela levels, but in practice giving dots of lights with too much contrast on the outer diameter of the beam. Beam quality is not measured in candela, such numbers while important can be misleading.
- To give light levels similar to halogen, a lens solution typically uses several lenses in array overlapping the output to try to create an even distribution of light within the beam, however in the process this creates a lot of side glare.
- Single parabolic reflectors using multi-chip LED arrays create a soft but precise beam which gives much more comfort than the high contrast beams created with lenses.
- Lenses over LED arrays create uneven edges with striations, compromising the effect of the lighting.
- Reflectors allow better glare control with a clear cut off angle, compared to lenses, because the source is directly shielded outside of the beam.
- The use of a glare shield in combination with a parabolic reflector reduces direct uncontrolled light and ensures the light is precisely controlled.

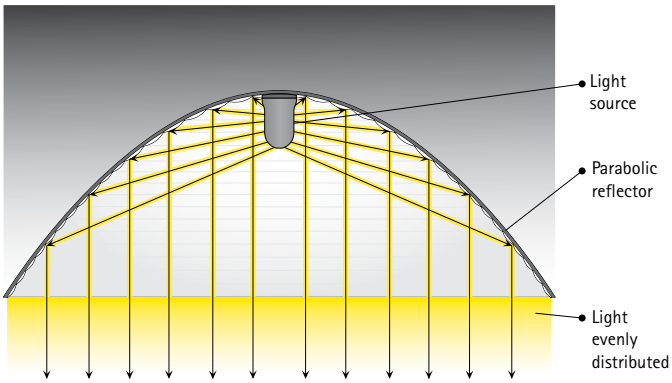

Diagram 1: Illustrates even light distribution using traditional light source and parabolic reflector

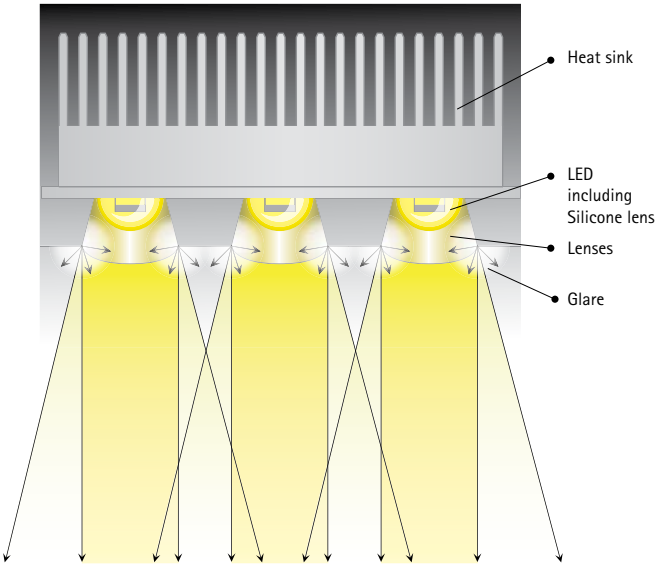

Diagram 2: Illustrates LED light source using lens technology


MEGAMAN®

Reflectors in a New Light

Thermal control

- Lenses need to be quite thick to refract light, and thus trap more heat therefore requiring larger heat sinks.
- MEGAMAN® Reflectors have an open style, allowing more heat to escape so that smaller heat sinks are possible, enabling a smaller fixtures.
- Even when glass covers are used on MEGAMAN® LED reflectors they do not control the light but purely protect them from collecting dust. As such the covers can be very thin and thermally more efficient as they trap less heat compared to lenses.
- Reflectors plus MEGAMAN®'s exclusive TCH technology enable higher power units in smaller modules for direct replacement of higher energy sources.

True replacement for existing halogen lamps

- When replacing halogen spotlights with LED spotlights, the use of a reflector provides the same light distribution, so the lighting does not need to be reconfigured.
- LED spotlights with reflectors are more aesthetically pleasing and conform to the expected appearance of a spotlight.

MEGAMAN®'s unique geometry

In order to reproduce the precise light control you get from parabolic reflectors, MEGAMAN® position their multi-chip LED arrays using a unique axial geometry both replicating the traditional approach and allowing the optimum thermal control with MEGAMAN® TCH technology.

This unique approach facilitates the use of reflectors with all the associated advantages of precise beam control and allows lumens to be where they are wanted with less glare.

Making optimum use of the lumen output through precise optical configuration, MEGAMAN® LED delivers the performance that lighting designers and their clients expect from spotlights. This is particularly important when replacing halogen spotlights with LED alternatives.

Aesthetics are also important as spotlights tend to be very visible. By using the compact-profile reflector design with its innovative LED multi-chip geometry, MEGAMAN® maintains the attractive appeal of traditional reflectors while offering all the advantages of LED technology.

MEGAMAN® goes even further achieving colour tolerances of just 100K and offers linear dimming from 1% - 100% with the designated driver and standard DC1-10V dimmer.

MEGAMAN® 's unique approach with axial LED geometry, parabolic reflector, glare shield and patented TCH thermal control offers the best solution for precise comfortable low energy lighting for accent and display applications.

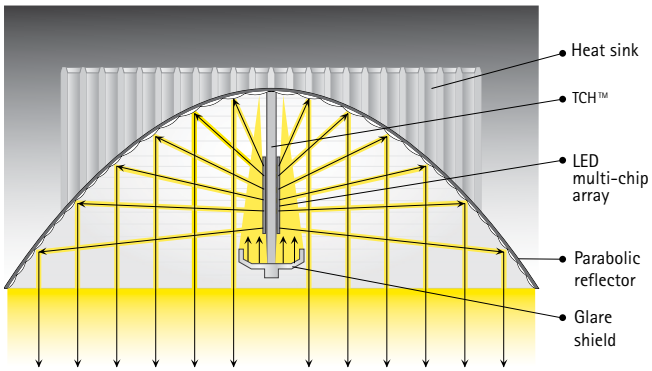

Diagram 3: Illustrates MEGAMAN®'s unique LED reflector technology

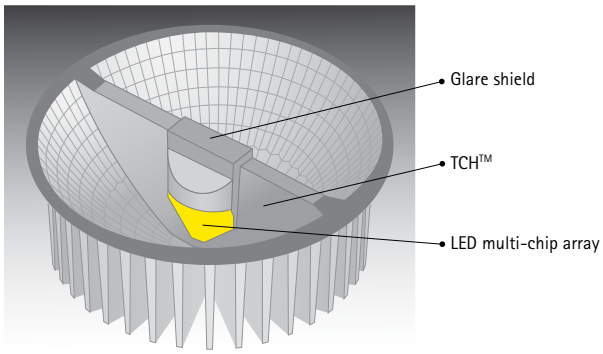

Diagram 4: MEGAMAN®'s unique geometry allowing optimum thermal control with MEGAMAN® TCH Technology

Lumens 'where you want them' per watt

How to compare light sources and their efficiencies:

Non-directional light sources
Since non-directional light sources emit equal light levels in all directions, a good measure for the efficiency of the product is its luminous flux (lm) and overall lamp efficacy (lm/W).

The luminous flux, expressed in lumen (lm), is the total quantity of light emitted from a lamp in all directions. Since the human eye is not equally sensitive to all wavelengths within the visible spectrum, the emitted spectrum is weighted by the eye sensitivity curve and integrated over the visual wavelengths 380 – 760 nm.

Although wavelengths below (UV) and above (IR) the 380 – 760 nm range are not taken into account as they do not contribute to the visual spectrum, they can still have a damaging impact in sensitive applications such as museums, art galleries or food illumination. With this in mind, MEGAMAN®'s LED range of products do not emit any light in the UV and negligible in the IR region and are therefore the preferred choice in UV/IR critical applications.

As overall lamp efficacy (lm/W) of a light source is calculated as the ratio between visible light and the consumed electrical power, the higher the efficacy number, the more efficiently the product converts electrical power into visible light.

Directional light sources
However, the efficacy measurement used for non-directional light sources cannot be transferred to directional ones, as light pollution needs to be taken into account; the glare from the edges of an LED lens, although not useful light, does contribute to a higher efficacy number. So, with directional light sources a new form of measurement is required to show how well a lamp is directing light where it is wanted.

Therefore, the measurement for showing the efficacy of a directional source is luminous intensity (cd). Luminous intensity quantifies the light emitted in a particular direction per solid angle and characterises the output for a directional light source.

Luminous intensities in different directions, measured by means of a goniometer, are plotted in polar diagrams. These show the light distribution of the direction light source and enable the beam angle to be determined.

The beam angle of a directional light source is defined as the angle at which the luminous intensity is half of the maximum luminous intensity. The maximum luminous intensity can also be obtained with the use of a lux diagram, since the maximum luminous intensity equals the lux level at a distance of 1 metre.

MEGAMAN® directional LED light sources
Although the majority of LED products on the market today use lenses to direct light, MEGAMAN® has developed its unique axial geometry reflector technology. MEGAMAN® LED reflector technology allows light to be directed without the need for a lens, resulting in better beam control, excellent efficiency and low glare lighting solution. (see section 'Reflectors in a New Light', page 68)

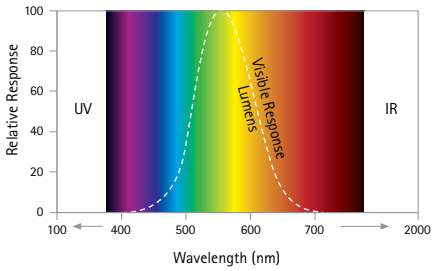

Diagram 1: Spectral Response Curve

m	Lux	Ø cm
0.5	5800	32
1	1400	65
1.5	622	97
2	350	130

Beam angle = 36°

The Max Luminous Intensity is taken from the Lux reading at 1 metre, e.g. 1400cd

Diagram 2: Lux diagram

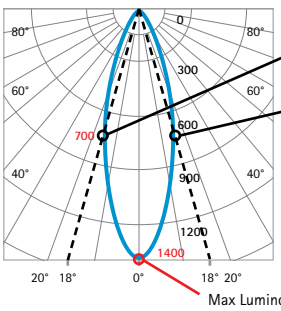

On the Polar diagram, locate the number which is half the Max Luminous Intensity, e.g. 1400/2= 700.

To establish the beam angle of a polar curve:
- Draw a line from the origin of the curve, along the radius on each side, making sure it crosses the curve at the value which is half the Max Luminous Intensity
- Note the angle from the 0° point each side
- Add each side together to get the full beam angle, i.e. 18° + 18° = 36°

Diagram 3: Polar diagram

Thermal Considerations

Temperature
To maximise the reliability and performance of LEDs, proper thermal management is essential. If the LED's maximum operating temperature is exceeded, light output and lumen maintenance decreases and as such the useful lamp life is shortened. Therefore it is essential that validation of an LED's temperature is undertaken by means of temperature measurements to ensure optimum performance.

In general, manufacturers define an LED's maximum operating temperature at the semiconductor level (Tj = T junction). To ensure this limit is not exceeded, temperature measurements are necessary. Although the critical temperature to measure is the junction temperature Tj, the inaccessibility of this point has led to the creation of an additional measurement – the Tc temperature.

This separate Tc temperature measurement point is chosen as such that it has a direct relation to the Tj junction temperature and must not exceed the specified limit. If the measurement of this Tc temperature is below or equal to the specified limit then the stated life and luminous flux of an LED will be achieved. Exceeding the limits set for Tc will negatively impact the initial product performance as well as its useful product life. All measurements must be performed by means of thermocouples that are correctly fixed to the Tc points.

Thermal Considerations

Thermal management
Temperature and its control have a significant impact on the quality and lifespan of an LED. To ensure LEDs operate at their optimum capabilities, effective thermal management is essential.

The principal role of thermal management is to extract the heat from the LED module and dissipate it into the surrounding air. This can be done through conduction, convection and radiation and different approaches are being taken to this issue across the industry, with varying degrees of success.

Optimum thermal management is achieved when the number of thermal conductive interfaces between the LED and its heat sink are reduced and the thermal resistance between these interfaces is minimised. In addition, careful consideration needs to be given to the heat sink material, its surface area, geometry and roughness as well as the management of airflow around the LED as a whole.

MEGAMAN®'s LED choice
All MEGAMAN® LED light sources are based on multiple chip arrays on ceramic substrate. This choice has multiple benefits in terms of performance, size and thermal management of the product. Compared to Power LED solutions the LED array can be mounted directly, without the need for an additional PCB and the ceramic substrate has a very low thermal resistance. Both of these allow less thermal resistance between LED and heat sink and as such allows better heat conduction away from the LED.

MEGAMAN®'s unique geometry
The majority of LED lamps on the market today incorporate exterior lenses with which to direct light output. However these tend to trap heat, meaning a larger heat sink is required. Thanks to innovative product development from MEGAMAN®, the company's LED directional light sources do not use lenses but reflectors to direct the light output. The open style of MEGAMAN®'s LED reflectors allows more heat to escape from the lamp, enabling smaller heat sinks to be fitted and giving the lamp a smaller profile.

Thermal Conductive Highway™
MEGAMAN®'s patented Thermal Conductive Highway™ technology uses a unique design of 'heat drain' across the reflector to dissipate heat efficiently and prevent deterioration of the LED and other components. The technology also gives the lamps a longer life with lumen maintenance, resulting in 90% of initial lumens being available even at the end of the lamp life. Thanks to careful thermal management, MEGAMAN®'s LED Reflector Series combines the higher efficiency, lifetime, and reliability benefits of LEDs, with the light output levels of many conventional light sources.

New display opportunities
Thanks to MEGAMAN®'s advanced thermal management technology, all of its LEDs can be positioned in areas not traditionally possible with hotter halogen equivalents. MEGAMAN® lamps can be placed close to the objects they are lighting, with no risk of heat, UV or IR degradation. This makes them ideal for sensitive display areas, such as food halls, museums or galleries. MEGAMAN® light sources can also be located in access areas close to the general public, due to their heat dissipation capabilities.

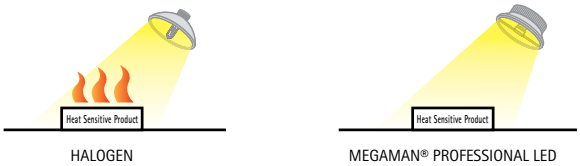

Diagram 1: Heat from Halogen Lamp versus LED in relation to Heat Sensitive Products

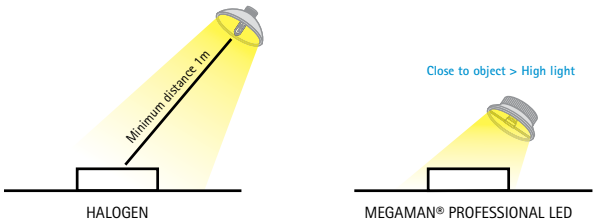

Diagram 2: Heat from Halogen Lamp versus LED in relation to distance from lit product


MEGAMAN

Colour Consistency

MacAdam Ellipses and Colour Temperature

As with more traditional light sources, the colour temperature of an LED will dictate whether it emits a warm or cooler light. The higher the LED's colour temperature, the cooler the resultant light effect. So, a cool white light has a colour temperature of 4000K, whereas a warmer light effect will have a colour temperature of 2800K.

Hot and cold colour temperatures

The colour temperature of a light source is taken from the temperature of a perfect black-body radiator that radiates light of a similar appearance to that of the light source. It is measured in units of absolute temperature; Kelvin (K). Interestingly, although red is associated with being a hot colour and blue a cold one, on the black body curve (also known as the Planckian Locus, see diagram 1), blue occurs at higher temperatures than red. A more visual example of this apparent colour temperature contradiction can be seen in candlelight, which emits a warm red orange glow, but in fact has a low Kelvin temperature of 1850K. Therefore higher colour temperatures (5000K more) are called cool colours (bluish white); lower colour temperatures (2700 – 3000K) are called warm colours (yellowish white to red).

Colour measurement of LEDs

LED and discharge lamps have negligible thermal radiation, so do not follow the form of a traditional black body spectrum. However, as with any colour, they can be represented on a so-called 'colour space' using the CIE 1931 (x,y)-chromaticity diagram (see diagram 2). Every colour is uniquely defined by one (x,y) point in this space. The colour points of thermal radiators lie on one curve in this space, the black body locus. The colour points of LED and discharge lamps for general lighting are located outside, but close to, this curve. Although a colour temperature can only be attributed to points on the black body locus, these light sources are also assigned a colour temperature: correlated colour temperature (CCT). The CCT is the colour temperature of a black body radiator which, to human colour perception, most closely matches the light of the source i.e. the point on the black body locus that lies closest to the colour point of the source.

Colour consistency

The key to creating an LED lighting scheme, that looks good for years to come is in ensuring that, over their lifespan, all of the lamps are performing within an acceptable tolerance in terms of colour deviation. To define 'acceptable tolerance' from lamp to lamp, LED manufacturers have adopted the MacAdam ellipse and SDCM (Standard Deviation of Colour Matching) measurement of colour consistency.

MacAdam ellipse

The MacAdam ellipse is a system of colour measurement. It measures how much colour variation is possible around these axes, before the human eye detects a colour change. A series of ellipses can then be drawn around any target colour, and the closer any given lamp is to the target, the less colour deviation will be experienced when these lamps are placed side by side in an installation.

The distance from the target point in each ellipse is measured in SDCM. An SDCM of 1 step means that there is no colour difference between LED chips, 2-3 SDCM means that there is hardly any visible colour difference. Colour consistency of 7 SDCM is accepted by the market and in line with Energy Star requirements.

MEGAMAN® Performance

Thanks to MEGAMAN®'s control of the phosphor/LED blend and the optimized control, MEGAMAN® LED professional light sources have a colour consistency of < 5 SDCM.

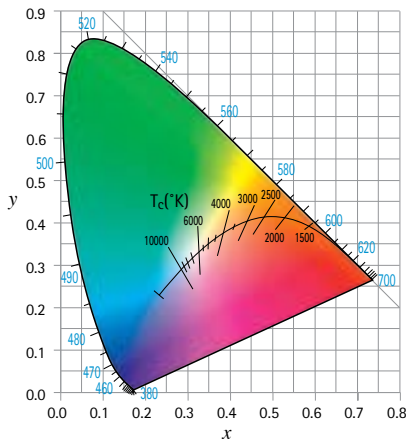

Diagram 1: Planckian Locus

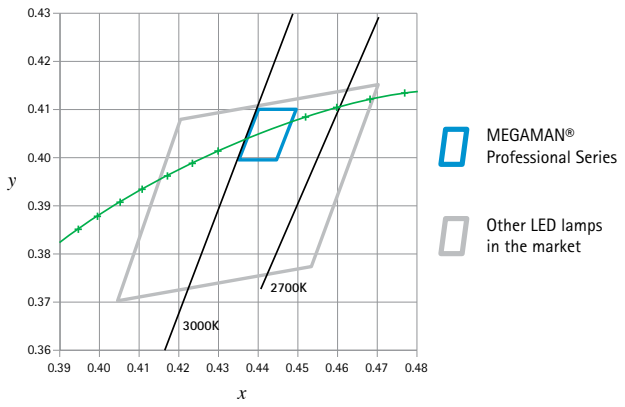

Diagram 2: CIE 1931 x,y Chromaticity Diagram illustrating MEGAMAN® Professional Series against other LED lamps

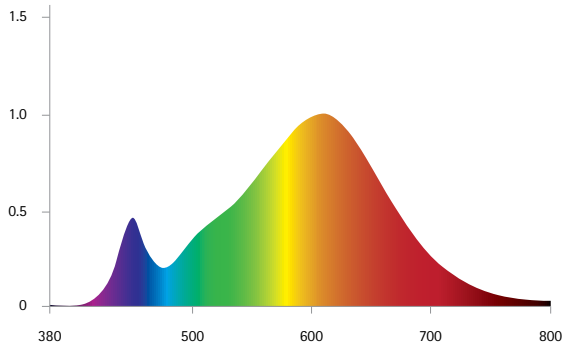

Diagram 3: MEGAMAN® 2800K Spectral Response Curve

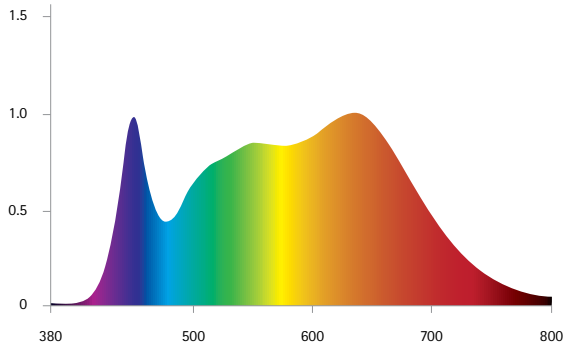

Diagram 4: MEGAMAN® 4000K Spectral Response Curve

Colour Rendering

Since 1931, when the first system of measuring colour rendering was formalised by the CIE (Commission Internationale de l'Eclairage = International Commission on Illumination), the lighting industry has been able to communicate the quality of its light to specifiers and end users alike.

The Color Rendering Index (CRI or Ra) is a quantitative measure, which rates a light source's ability to reproduce the colours of objects faithfully. In order to objectively compare the colour rendering properties of any light source, the CIE's standardised measuring method operates on a scale from 0 to 100 (poor to excellent). The colour change of 14 standard colours is calculated when an object is exposed to a specific light source and then this is compared to a reference illuminant of the same colour temperature (a black body* is used for colour temperatures up to 5000K and daylight above that). The CRI for a pair of light sources can only be compared if they have the same colour temperature.

The first eight, non-saturated colours (R_1 – R_8), are used to calculate the general CRI and the remaining 6 saturated colours (R_9 up to R_{14}) supply additional information about the colour rendering properties of the light source.

The CRI scale is chosen so that an ideal black body source, such as incandescent or halogen lamps, is by definition a CRI rating of 100. For light sources emitting a discrete spectrum, like LED and discharge lamps, the CRI can be anywhere between 0 - 100. As a rule of thumb, the more the spectrum is filled at all wavelengths (380 – 760nm), the better the colour rendering properties of the source, however a high CRI measurement intrinsically means lower efficacy (as less efficient wavelengths are also represented in the spectrum).

Colour Rendering Index (CR) Table

R1	Light greyish red	
R2	Dark greyish yellow	
R3	Strong yellow green	
R4	Moderate yellowish green	
R5	Light bluish green	
R6	Light blue	
R7	Light violet	
R8	Light reddish purple	
R9	Strong red	
R10	Strong yellow	
R11	Strong green	
R12	Strong blue	
R13	Light yellowish pink	
R14	Moderate olive green	

* A black body is a theoretical object that absorbs all incident electromagnetic radiation and due to its ability to absorb at all wavelengths, is the best possible emitter of thermal radiation. It radiates a continuous spectrum that depends on the body's temperature.


meringues

R9 Technology

The MEGAMAN® LED R9 Series maximises the visual impact of meat, fresh fruit and vegetables by increasing the product's red colour rendition. Thanks to MEGAMAN®'s innovative design and patented technology, the R9 series offer retailers a high quality lighting intensity and superb performance. Easier to control than their high CRI high-pressure sodium equivalents, The MEGAMAN® LED R9 Series of lamps are the best alternative to traditional halogen in this type of application.

The LED R9 Series outperforms metal halide products, which are traditionally weak in red rendition. Furthermore they are quick and simple to turn on and off, providing instantaneous, colour-perfect luminance, not having the long warm-up or restart time associated with existing metal halide and high pressure sodium technology.

MEGAMAN® R9 LED light sources not only have a high red colour rendition value of R9 of ≥ 76, but also have high values for regular CRI (CRI=94) and the other "saturated" colours R10 to R14. This means that the MEGAMAN® LED R9 Series creates well-balanced and high quality light, making it the perfect light source for food and other display lighting applications, where a sense of the freshness and richness of the product's red colours are needed.

CRI table for MEGAMAN® Standard LED and MEGAMAN® R9 LED

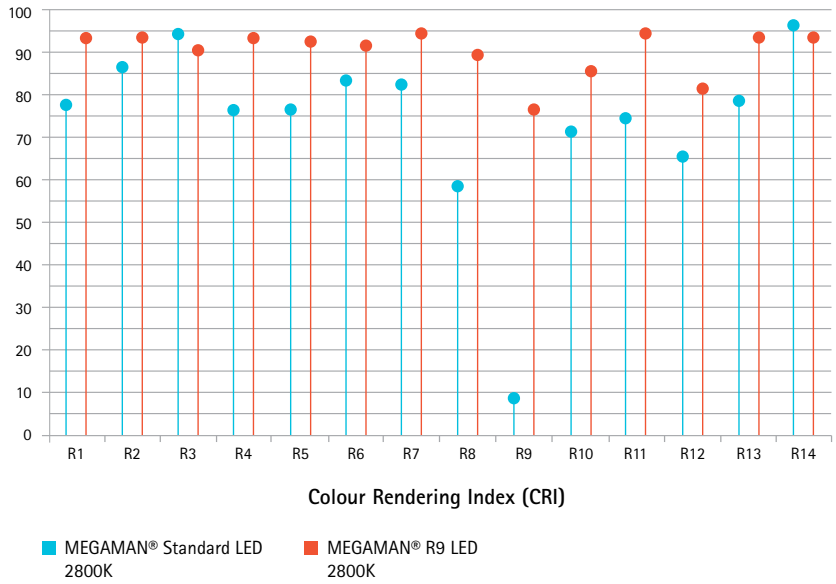

Life and Lumen Maintenance

Traditionally the rated lamp life of light sources is defined as an average rating, in hours, for the time it takes 50% of a large group of the lamps to fail (B50). However, this rating is purely based on lamp survival and does not take into account lumen depreciation. An additional way of measuring lamp life is therefore required for LEDs, which can have extremely long lives.

To measure the lumen depreciation, an LED is tested under normal operating conditions and the lumen output of the lamp is measured at 6,000 hours. This measurement is then compared to the initial output of the lamp and the depreciation of lumen output calculated- see Energy Star table. This is then extrapolated on a lumen maintenance curve- see graph.

The resultant curve shows the amount of remaining luminous flux output- expressed as a percentage of the initial output- at any selected elapsed operating time. This data then makes it possible for manufacturers to provide a relative lumen output calculation over a lamps' life and, importantly, to be able to indicate the point at which an LED will be operating at an output level that is not considered viable in terms of light quality. This point is called the rated lumen maintenance life (Lxx) and shows the elapsed operating time at which a specified percentage of lumen maintenance is reached - this is expressed in hours. To illustrate this, if an LED has a rated lumen maintenance life of L70 at 40,000 hours, then it will operate for 40,000 hours before falling below 70% of its initial light output level.

MEGAMAN® quotes this L70 number for all LED products which is the expected time when used in normal open conditions for the unit to reach 70% lumen maintenance and the end of useful life. MEGAMAN® also tests all LEDs in the most onerous conditions, for example to simulate use in enclosed fixtures, and calculate a minimum rated life. Both rated life and L70 life are quoted on the product pages.

MEGAMAN® has an ongoing program for long term life test of professional LED's. Test measurements of lumen output are taken regularly to verify the projections of lumen maintenance and life. For this reason life claims may change and the website should be referenced for the latest information. (www.megamanlighting.com)

Rated life for LED products based on 70% lumen maintenance

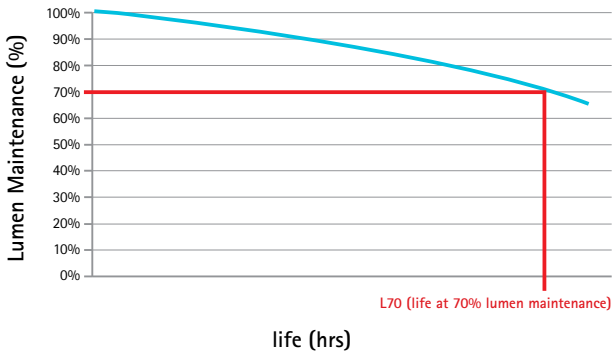

6,000-Hour Lumen Maintenance Thresholds Table from Energy Star

Minimum lumen maintenance at end of 6,000 hours (% of initial lumens; -3% tolerance)	Maximum L70 Life Claim (hours)
86.7%	15,000
89.9%	20,000
91.8%	25,000
93.1%	30,000
94.1%	35,000
94.8%	40,000
95.4%	45,000
95.8%	50,000


MEGAMAN

Controlling an LED

MEGAMAN® offers a range of tailor made LED converters to optimise the performance of its LED reflector products.

The current/voltage characteristic of an LED is similar to other diodes, in that the current is dependent exponentially on the voltage; a small change in voltage can cause a large change in current. If the maximum voltage rating is exceeded by a small amount, the current rating may be exceeded by a large amount, potentially damaging or destroying the LED.

To avoid this scenario, MEGAMAN® uses constant current drivers within all of its LED lamps, to ensure their stable operation. By controlling the current through the LED in this way, the light output of the LED is equally regulated and no differences in light output are observed.

Additionally, MEGAMAN® offers LED reflectors for operation on AC/DC12V. These products have an integrated constant current driver which allows operation directly on 12V AC/DC transformers. When halogen transformers are used to drive LED products care should be taken that the transformers can cope running on low load - that means one lamp on one transformer may not provide enough load to keep it running.

All MEGAMAN® converters have a long service life of 50,000 hours and offer multiple benefits :

- Flicker free operation with stable output even with fluctuations of the supply voltage
- Automatic restart capability when short-circuit or overload is absent
- Equipped with harmonics filter to reduce main harmonics
- Ambient temperature range -30°C to + 40°C
- Power factor >0.9
- Protection class II
- Compliant with international standards with respect to electromagnetic interference

Additionally the constant current converters allow linear dimming (100%-1%) with any DC1-10V dimmer.

Total dimming solution

The MEGAMAN® LED dimming series comes in three forms:

- Linear dimming (for LED using conventional* Dimmer Switches)
- DorS dimming - 4-step dimming (for LED Dimming Series, with integrated driver)
- Linear dimming (DC1-10V) (for LED with external drivers DC1-10V dimming)

Linear dimming for LED using conventional* Dimmer Switches

This provides a smooth dimming experience similar to that obtained with traditional incandescent and halogen lamps connected to a leading edge dimmer.
To dim, turn the knob to achieve the required brightness level from 100% to 10%.

DorS dimming for LED using conventional ON/OFF Light Switches (4-step dimming technology)

This 4-step dimming concept provides convenient, hassle-free instant dimming using a standard on/off light switch. You can easily and economically create an assortment of stunning ambient lighting schemes with DorS dimming technology. Switch the lamp on. To dim, switch the lamp off and then on again within 3 seconds. Repeat to dim the lamp to the desired level (100%, 50% 20%, 5% and back to 100%).

Linear dimming for LED with External Drivers

Linear dimming facilitates a smooth dimming experience comparable to traditional lamp sources.

The brightness level can be seamlessly dimmed from 100% down to 1% when the lamp is connected to a DC1-10V dimming driver and DC1-10V dimmer.

Please visit www.megamanlighting.com/LEDdimmers for the list of compatible dimmers and general guidelines.

* There is no standard for dimmer switches therefore we can not guarantee performance on every dimmer switch.

Sustainability

MEGAMAN® – Building a Better Tomorrow
As the world's leading manufacturer of energy saving lamps, sustainability not only means designing and producing environmentally friendly products to MEGAMAN®, but also includes its commitment to minimising the environmental impact arising from all aspects of its business.

Sustainable product innovation
From product development to disposal and recycling, MEGAMAN® prioritises environmental management and strives to:

- Implement pollution-free processes in the entire product life cycle
- Use renewable or recyclable materials to minimise the use of resources
- Comply with environmental legislation and industry codes of practice
- Promote environmental protection awareness among staff and business partners

MEGAMAN®'s environmental policy 'Building a Better Tomorrow' guides the company to produce eco-friendly products which offer better energy-efficiency with low environmental impact, increased product life expectancy and utilising recycled content.

Among its product ranges is *True Green*; these energy saving lamps are completely free of hazardous liquid mercury. MEGAMAN® uses amalgam instead, which contains a small amount of chemically bound mercury and is safer, as well as being more environmentally friendly. In addition, a number of MEGAMAN®'s energy saving lamps have a layer of silicone on the glass bulb which acts as a protection as well as eliminating the use of toxic acids that are usually used to produce traditional frosted finishing. This layer of silicone also helps to prevent the leakage of any possible mercury vapors as it minimises the occurrence of shattered glass, which is most dangerous during disposal. It also makes recycling of the amalgam mercury and glass much easier as well as providing a better light tone combined with the energy efficiency expect from these light sources. MEGAMAN®'s lamps are the first in the world to include this safety feature.

Environmental education
MEGAMAN® established the first LED lighting showroom in its head office in Hong Kong in September 2010. The 600 m^2 showroom comprises five business and retail environments where the overall design and idea is to show low-carbon, eco-friendly concepts through the demonstration of the versatility and energy efficiency of LED lamps. Visits to the showroom can be arranged for business partners, schools, NGOs and other stakeholders, to show how innovative LED lighting can best be maximised to save energy.

The future of the environment is in our hands
The focus of MEGAMAN®'s sustainability initiatives is to reduce resources consumption and environmental impact and have a harmonious relationship with stakeholders, while running a profitable business.

MEGAMAN® completed its first carbon audit in 2010, quantifying its emissions and carbon footprint, including emissions related to the fuel and electricity usage, transportation and refrigeration usage in production plants in mainland China. Its target for 2011 is to reduce carbon emissions by 3%.

Sustainability Report 2009-2010
MEGAMAN® has recently launched its first Sustainability Report, showing the company's commitment to sustainability development. The report also serves as a platform to promote and facilitate dialogue with the company's stakeholders on sustainability performance in economic, environmental and social aspects.

To view the Sustainability Report, please visit www.megamanlighting.com/sustainability-report.

Rigorous Quality and Management

All of MEGAMAN®'s LED and CFL lamps are designed, tested and produced in its state of the art factories in Xiamen, China. Standards have been implemented factory-wide to ensure MEGAMAN®'s manufacturing processes deliver innovative, reliable and safe products now and in the future.

To ensure that MEGAMAN® products comply with the highest quality standards, the company's manufacturing plants are equipped with state of the art assembly lines. The in-house laboratory is ISO 17025 certified by CNAS and NVLAP, and is also eligible to perform on-site testing for UL, SEMKO and TUV marks.

MEGAMAN®'s business is run under the most stringent management and quality systems, so that the green elements of the production process are maxmised, that employee welfare is prioritised and that the company is socially responsible to the local community. To continually develop these areas, MEGAMAN® has undertaken a range of international accreditations. These include:

Quality Management System
MEGAMAN® lamps are manufactured in ISO 9001:2000, ISO 14001:2004, ISO 14064-1:2006, OHSAS 18001:1999, SA 8000:2001 and QC 080000:2005 certified manufacturing plants.

Corporate Social Responsibility
MEGAMAN® has received OHSAS 18001:1999 and SA 8000:2001, confirming the level of care for employees and reinforcing the company's pledge to being socially responsible.

Controlling use of hazardous substances
MEGAMAN® plants are QC 080000 certified. Underlining the fact that the company's manufacturing processes are closely monitored to ensure ultimate control of hazardous substances.

MEGAMAN® lamps are made using premium quality materials and innovative technologies within stringent control measures, to deliver maximum performance and energy efficiencies.

Member of Zhaga

Zhaga is an industry-wide co-operation, aimed at the development of standard specifications for the interfaces of LED light engines*, with the ultimate goal of making LED light sources, manufactured by different companies, interchangeable. As a committed member of the Zhaga Consortium, MEGAMAN® is working, alongside other manufacturers, to ensure that the Zhaga vision for standardisation becomes a reality.

Interchangeability is achieved by defining interfaces for a variety of application-specific light engines. Zhaga's standard specifications will cover the physical dimensions, as well as the photometric, electrical and thermal behavior of LED light engines. The Consortium is focused on interoperability through standardisation, not on performance specifications.

Zhaga

Zhaga is

- A consortium of industry players that creates
  - Standardised interfaces for LED Light Engines (LLEs), to secure a stable design platform for luminaire designers and manufacturers
- An industry-wide co-operation
  - LED light engine manufacturers
  - LED luminaire manufacturers
  - Additional components manufactures (heat sinks, optics, etc)
- An open co-operation
  - Open to any company that subscribes to the vision/mission and is willing to contribute to the success
- A global co-operation
  - Zhaga is a co-operation of companies from all regions
  - Zhaga will set global standards

The Zhaga Consortium was established in February 2010. More than 100 companies have joined the Zhaga Consortium.

Zhaga will focus on interoperability through interface standardization, not on perfomance specification

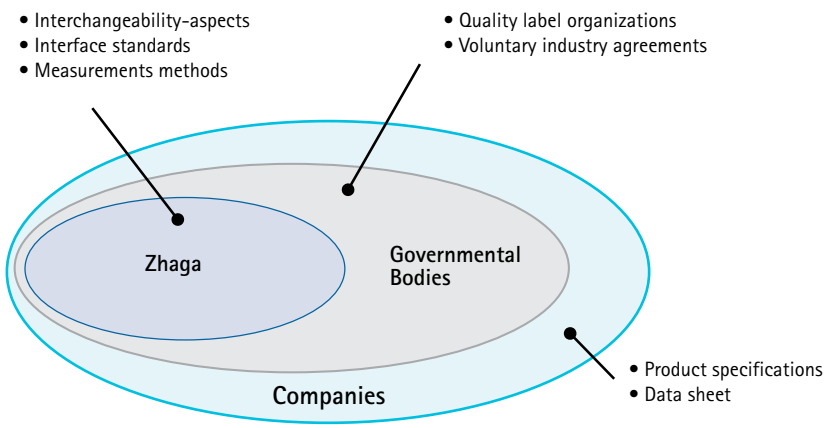

* An LED light engine is the combination of an LED module and the associated control gear. Zhaga treats the LED light engine as a black box, with defined interfaces that do not depend on the type of LED technology used inside the light engine. The Zhaga specifications only define the outside of LED light engines.


Zhaga

TECOH® – the New Technology

The creation of a comfortable, yet attractive environment is key to the success of any retail scheme. Light plays a major role in the display and promotion of products and the quality of this light can make or break any scheme.

MEGAMAN® understands that highly efficient, eco-friendly solutions are required and has as a result, created a unique LED solution – the TECOH® product range. TECOH® is an LED 'capsule' with dimensions similar to G12 based ceramic metal halide lamps. The current product range comprises of a 36W LED capsule as a viable alternative to a 39W ceramic metal halide product.

The unique patented thermally conductive base and head design used within TECOH® offer superb heat dissipation, resulting in excellent lighting performance and lumen maintenance. The two highly efficient, axial positioned LED arrays also allow fixture manufacturers to use reflectors to effectively control the beam and create powerful accent lighting.

Adaptable and long-lasting

With dimensions similar to G12 based metal halide lamps, only simple adaptations are required to existing fixtures to accommodate the TECOH® product range. The lamps have also been designed with future-proofing in mind: the capsule heads are exchangeable and upgradeable to accommodate technological advances. In addition, the lamp's design ensures consistent luminous flux over its lifespan and, after 40,000 operating hours, 70% of the initial luminous flux still remains.

In comparison to ceramic metal halide products the TECOH® range offers additional ecological, as well as performance, advantages:

- Life time up to 40,000 hours with a 70% lumen maintenance throughout the entire lamp life resulting in low maintenance costs
- Instant start and hot restrike capable
- Dimmable
- High colour consistency (< 5 SDCM) throughout life and independent of the burning position
- Variety of choice to match application requirements – R9 options available
- No UV radiation, no special UV-filters are required for safe operation
- Negligible IR radiation
- No hazardous substances, eliminating the risk of potential exposure to radioactive Kr85 in case of lamp breakage
- No safety glass required since explosion risk is eliminated as TECOH® is not operating at high pressures unlike metal halide alternatives.

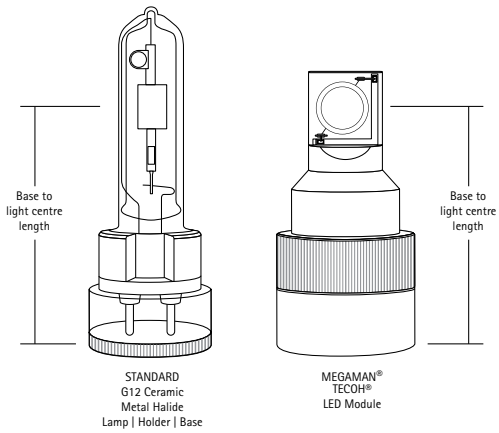

With its unique design TECOH® is the ideal lighting solution for a variety of shop lighting applications such as boutiques, food outlets and shopping malls. Due to the absence of UV radiation and negligible IR radiation TECOH® also successfully meets all the requirements for museum and gallery lighting. TECOH® is not a retrofit solution and requires design and engineering to be integrated into a fixture.

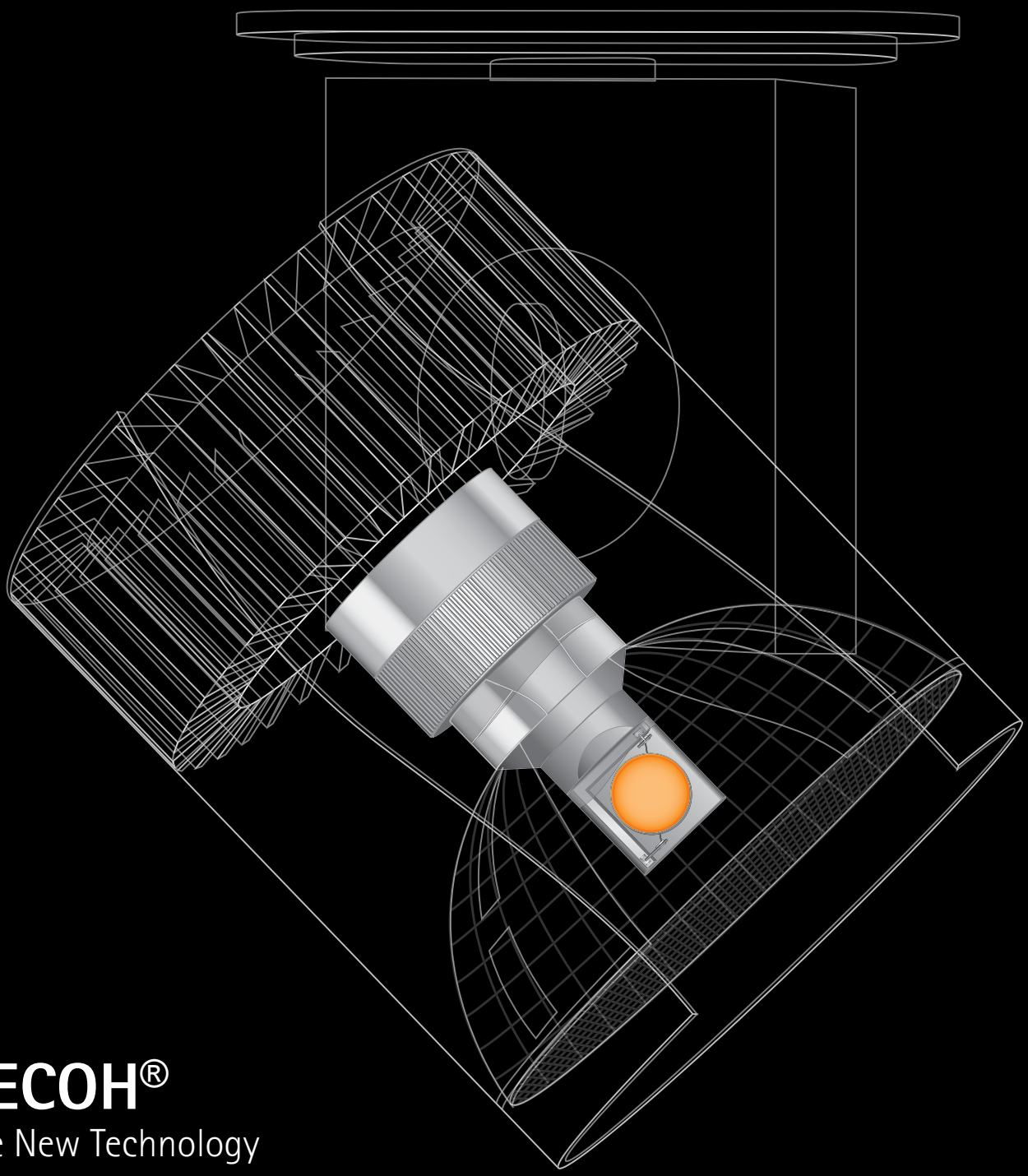

TECOH®

the New Technology